Product Data Sheet

INDOOR LIGHTING

LARA-S 18W

CODE: 2027443



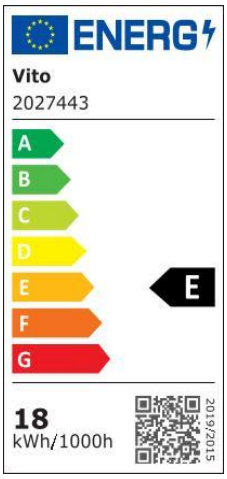

Area of application

Backlighted square surfaced-mounted LED Panels with full plastic body and 3CCT-DIP function. For indoor lighting applications to be installed on ceilings of corridors/rooms in homes, shopping malls, commercial areas..

Product Advantages

LARA-S is an advanced family of square surface mounted LED light fixtures, equipped with high-efficiency LED sources in a backlight configuration, ensuring uniform illumination and visual comfort. The fixture features a PP housing, finished in sand white. An opal polystyrene diffuser with anti-yellow treatment provides a 120° beam angle and maintains low glare performance with UGR<19. A DOB (Driver on Board) solution and 3CCT-DIP switch function are included, enabling compact design and reliable operation. Designed for general interior lighting in residential, commercial and professional environments.

VITO EUROPE
102 Iztochna Tangenta str. 4th Floor
P.C. 1528, Sofia/Bulgaria
Phone: +359 2 4341575
E-mail: info@vitoeurope.com

www.vitolighting.com

Product Data Sheet

INDOOR LIGHTING

LARA-S 18W CODE: 2027443

Product Features

Electrical

Power (Watt): 18
Voltage: 220-240V AC ~ 50/60Hz
Power Factor: >0.6
Electrical Protection: Class II
Surge Protection: --
Dimmability: NO
Switch Cycle (Times): 30000

Lighting

Lumen (Lm): 1980
Luminaire efficacy (Lm/W): 110
Colour Temperature: 3CCT (3000K/4000K/6500K)
Beam Angle: 120°
CRI: Ra >85
Lifetime (Hours); 30000
EEI : E

Material Characteristics

IP Class: IP20
IK Class: -
Material: PP
Ambient Temperature: -10°C<ta<+40°C
Body Color: WHITE
Product Size (mm): 214x31x214

Packing Informations

Pieces/Outbox: 20
Outbox Size (mm): 500x375x245
Outbox G.W. (Kg): 8,4
Outbox Volume (m³): 0,0459
Unit Weight (Gr): 420
Barcode : 6977231359914

Technical Drawing

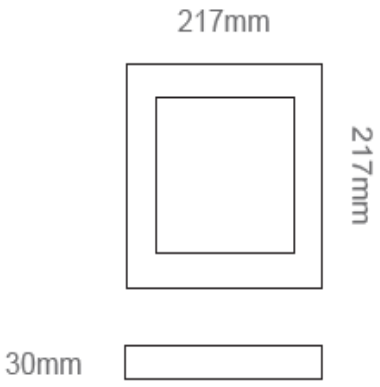

Light Distribution Curve

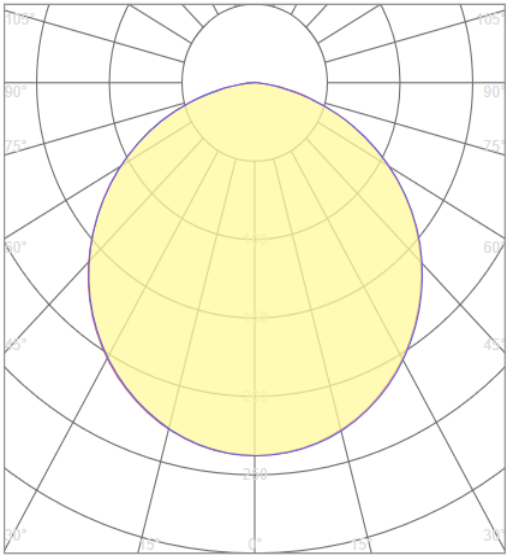

System Definition: VT/LARA-S/18W/3CCT/D217x217/SQUARE SUR.LED PANEL

VITO EUROPE
102 Iztochna Tangenta str. 4th Floor
P.C. 1528, Sofia/Bulgaria
Phone: +359 2 4341575
E-mail: info@vitoeurope.com

www.vitolighting.com